Intel 12-14th Generation Core™ i3/ i5/ i7 Series CPU
Rugged and Compact Industrial PC

AX-521F-C/D/E Series



Features

- Intel® 12-14th generation Core™ i3/ i5/ i7 Series CPU
- H610/Q670 Chipset
- Dual channel DDR4 up to 64GB
- 3 Displays: DP, HD and VGA
- 3 GbE LAN (2 x Intel i210, 1 x Intel i219)
- 1 RS-232/422/485, 3 RS-232/485, 2 RS-232
- 4 USB 3.0, 4 USB 2.0 (H610) or 6 USB3.0, 2 USB2.0 (Q670)
- 1 x PCIe x16 slots (x16 signal) by default, or 2x PCIe x16 slots (x8 signal)
- 2 x PCIe x4 slots (1 x4 signal, 1 x2 signal)
- Q670 supports 2 SATA RAID (supports RAID 0/RAID 1, switchable in BIOS)
- Supports 4G/5G, Wi-Fi module expansion
- DC 9~36V
- 220 x 226 x 176 mm (L x W x H), supports Wall-mounting
- Modular and cable-free design
- CE/FCC Class B, ESD 8KV/15KV
- Windows 10/11 and Linux multiple version OS

Specifications

Items		Descriptions
Processor System	CPU	Intel® 12-14th Gen Core™ Processors
	Processor Base Power	65W MAX
	Socket	LGA1700
	Chipset	H610/Q670
	BIOS	AMI 128Mbit SPI Flash
Memory	Sockets	Dual channel DDR4 SO-DIMM
	Capacity	Max. 64GB
Graphics	Controller	Intel UHD Graphics 770
External IO	DP	1 x DP1.4a up to 4096x2304@60Hz
	HD	1 x HD2.0b up to 4096 x 2160@60 Hz
	VGA	1 x VGA up to 1920 x 1200@60Hz
	LAN	2 x Intel i210 GbE, 1 x Intel i219 GbE
	USB 3.0	H610: 4 USB3.0 ; Q670: 6 USB3.0
	USB 2.0	H610: 4 USB2.0; Q670: 2 USB2.0
	Serial Ports	1 RS-232/422/485, 3 RS-232/485, 2 RS-232
	Audio	1 x Line out, 1 x Mic in
	Power Connector	1 x 3 PIN Phoenix terminal
LED & Switch	External Interface (4P)	Pins 1–2 supports remote switch (remote on/off) function; Pins 3–4 provide 12V output power supply
	Reset	1 x Reset Button
	Power Button	1 x Power Button
	LED	4 (HDD Activity LED, HDD/RAM Presence LED, User1 LED, User 2 LED)
Expansion	USB	1 x internal USB2.0 (Type A)
	PCIe/PCI	1 x PCIe x16 slots (x16 signal) by default, or 2x PCIe x16 slots (x8 signal) 1 PCIe x4 slot (x2 signal) 1 PCIe x4 slot (x4 signal), unavailable with H610
	SATA3.0	2 x SATA 7+15, Q670 supports RAID 0/RAID 1, switchable in BIOS
	M.2 E-Key	1 x M.2 2230 supports Wi-Fi (supports PCIe)
	M.2 B-Key	1 x M.2 3042 B-Key supports 4G (H610), 1 x M.2 3052 B-Key supports 4G/5G (Q670); or 1 x M.2 2280 supports SATA3.0
	M.2 M-Key	1 x M.2 2280 M-Key supports SATA3.0 (H610); 1 x M.2 2280 M-Key supports SATA3.0 or NVMe (Q670)
	SIM	1 x NANO SIM
Power Requirement	Power Type	9~36V DC input
	Power management	AT/ATX
	Max. Consumption	240W
Others	Watchdog	65536 lever, 0~65535 sec
	TPM	TPM2.0 (Optional)
Physical Characteristics	Construction	Aluminium Alloy
	Mounting	Wall Mounting
	Dimensions	220 x 226 x 176mm (LxWxH)
	Weight	4.3 Kg
Environment	Operating Temperature	0~50°C (32~122°F)
	Storage Temperature	-40~85 °C (-40~185°F)
	Operating Humidity	95% @ 40 °C(Non-Condensing)
	Storage Humidity	95% @ 60 °C(Non-Condensing)
Certification	EMC	CE, FCC
OS	Operation system	Windows 10/11, centos 8, ubuntu 20.04/22.04

Dimensions

Unit: mm

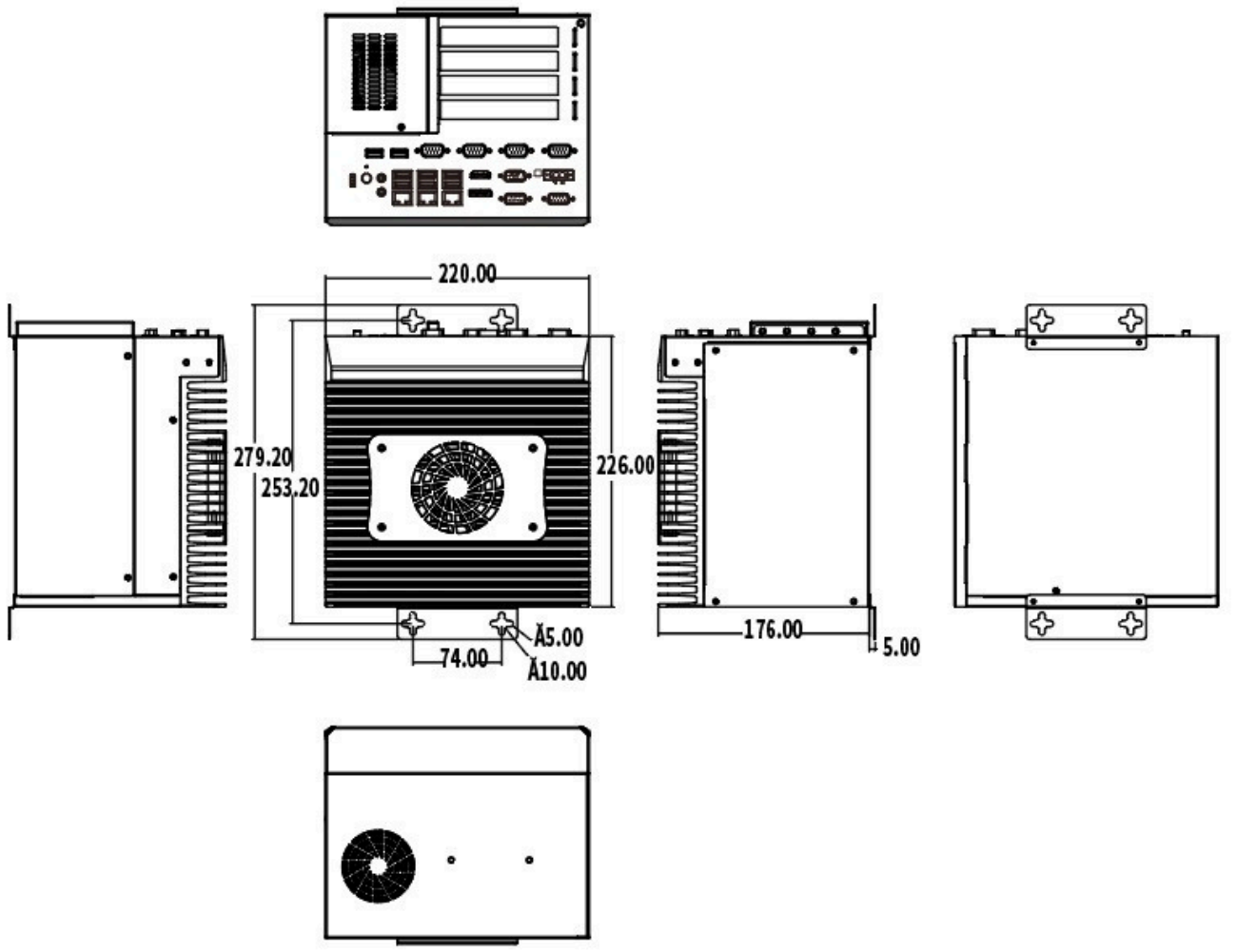

Interface

H610

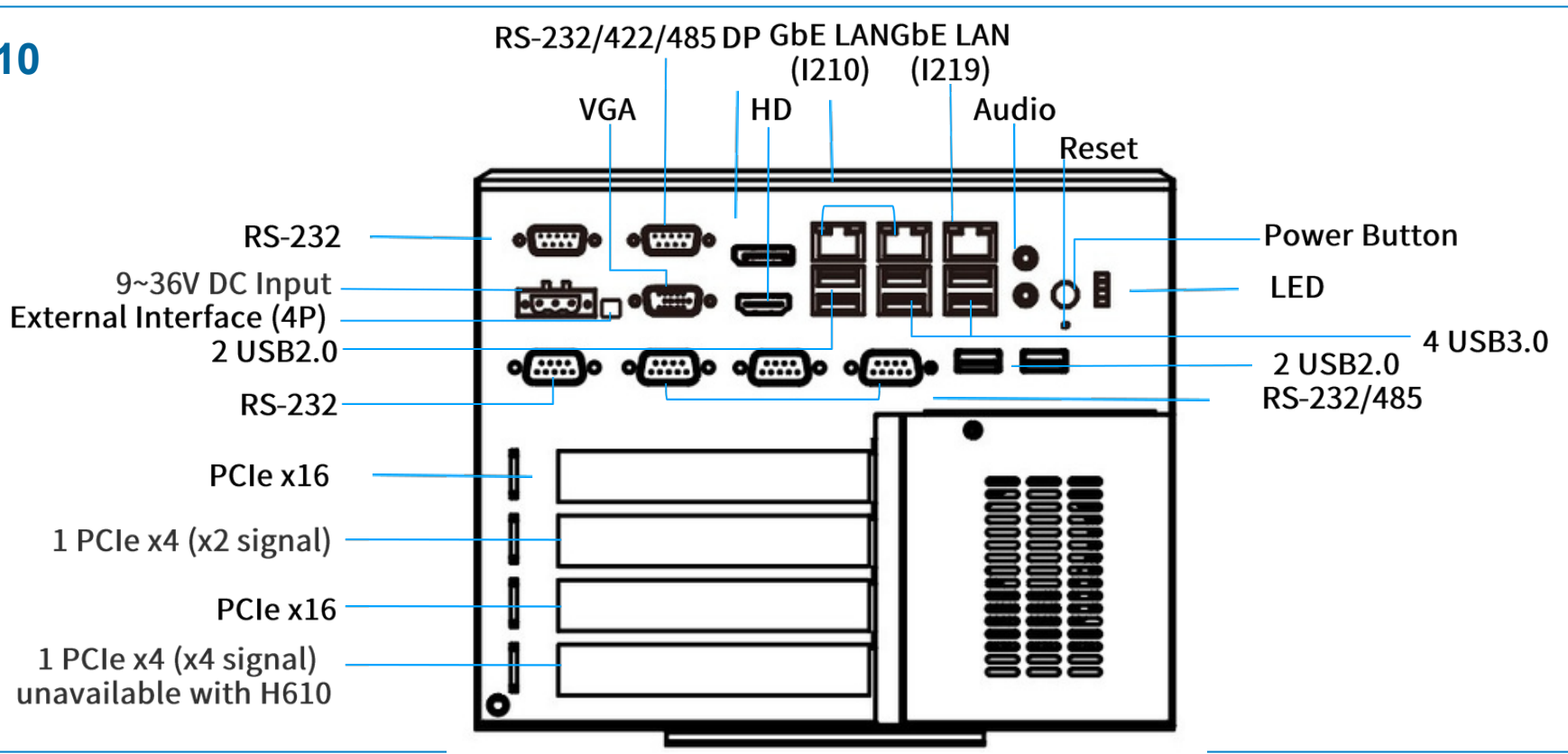

Q670

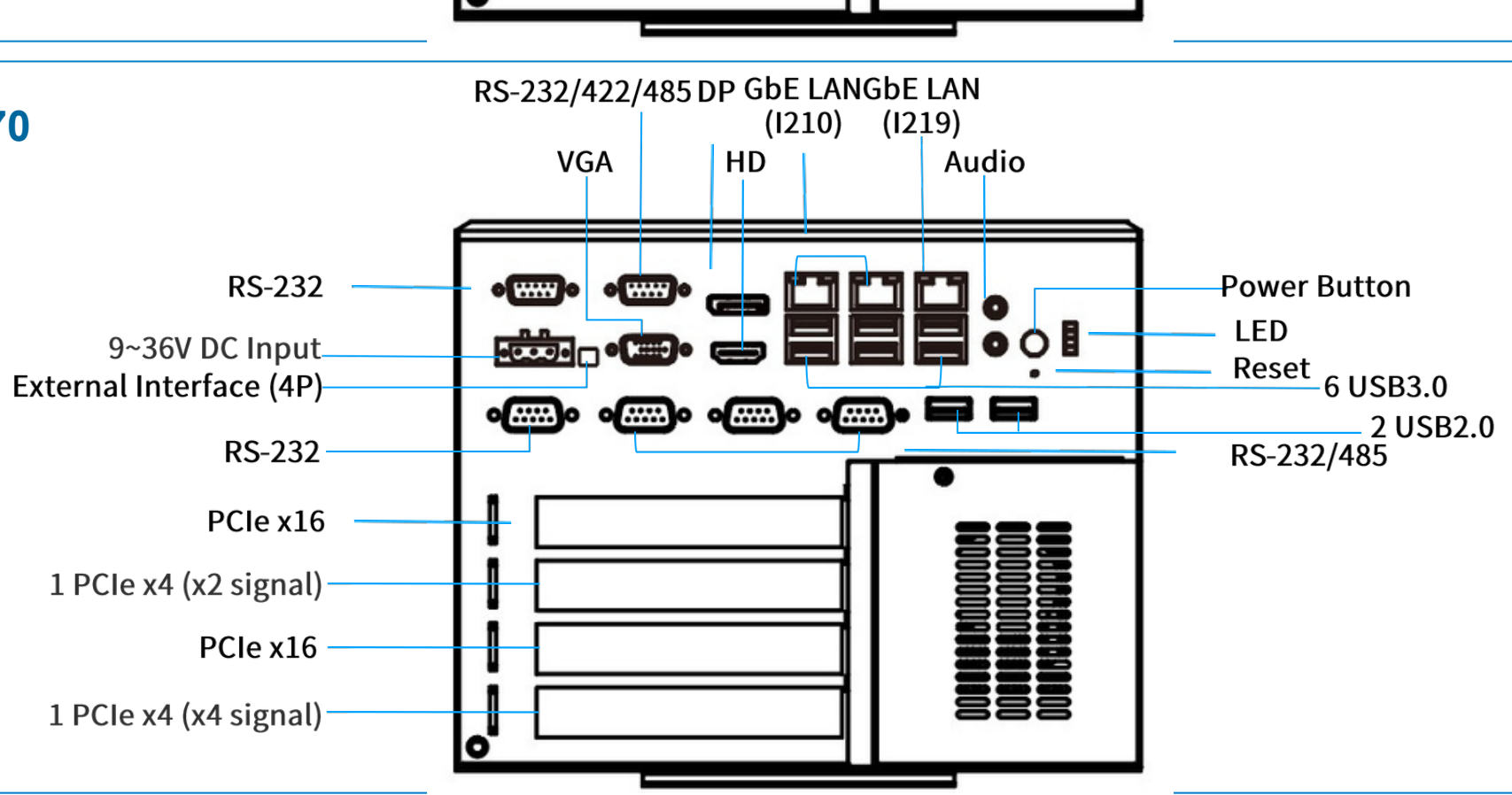

Ordering Information

Part Number	CPU	Processor Base Pow er	Max. Frequency	Core	T hread	GbE	COM	USB3.0	USB2.0	M.2	DC-Input
AX-521F-C-3000	i3-12100	60W	4.30 GHz	4	8	3	6	4or 6	4 or 2	3	24V DC
AX-521F-C-5000	i5-12400	65W	4.40 GHz	6	12	3	6	4or 6	4 or 2	3	24V DC
AX-521F-C-5000	i5-12500	65W	4.60 GHz	6	12	3	6	4or 6	4 or 2	3	24V DC
AX-521F-C-7000	i7-12700	65W	4.90 GHz	12	20	3	6	4or 6	4 or 2	3	24V DC
AX-521F-D-3000	i3-13100	60W	4.50 GHz	4	8	3	6	4or 6	4 or 2	3	24V DC
AX-521F-D-5000	i5-13400	65W	4.60 GHz	10	16	3	6	4or 6	4 or 2	3	24V DC
AX-521F-D-5000	i5-13500	65W	4.80 GHz	14	20	3	6	4or 6	4 or 2	3	24V DC
AX-521F-D-7000	i7-13700	65W	5.20 GHz	16	24	3	6	4or 6	4 or 2	3	24V DC
AX-521F-E-3000	i3-14100	60W	4.70 GHz	4	8	3	6	4or 6	4 or 2	3	24V DC
AX-521F-E-5000	i5-14400	65W	4.70 GHz	10	16	3	6	4or 6	4 or 2	3	24V DC
AX-521F-E-5000	i5-14500	65W	5.00 GHz	14	20	3	6	4or 6	4 or 2	3	24V DC
AX-521F-E-7000	i7-14700	65W	5.40 GHz	20	28	3	6	4or 6	4 or 2	3	24V DC

Optional Accessories

PartNumber	Description
MF0A000000000070	WIFI+BT module M.2 2230 PCIe WIFI5 2T2R AW-CB515NF
MF0A000000000069	WIFI+BT module M.2 2230 PCIe WIFI6 2T2R AW-XB547NF
MF0A000000000016	5G module, M.2 RM500Q-GL Sub-6 GHz Worldwide (Excluding US)
MF0A000000000042	5G LTE module M.2 RM520NGLAA-M20-SGASA, Worldwide
MF0A000000000036	4G LTE module M.2 EM05CEFC-128-SGAS, China
MF0A000000000066	5G LTE module M.2 RM500UCNVAA-D10-SNADA EMEA/Asia-Pacific

OS supports

	Description
Windows	Win10 IoT Ent 2019 LTSC Entry OEM
	Win10 IoT Ent 2019 LTSC MultiLang ESD OEI High End
	Win10 IoT Ent 2019 LTSC MultiLang ESD OEI Value
	Win10 IoT Ent 2021 LTSC Multilang ESD OEI Entry
	Win 11
Linux	centos 8
	ubuntu 20.04~24.04

Packing List

Part Number	Description	Quantity
-	AX-521F-C/D/ESeries Rugged and Compact Industrial	1
ZM0A000000000254	PC Power Adapter	1
KE0A000000000004	Round head screws	4
ZM0A000000000020	Three-plug power cord	1
MC0A000000000019	Wall-mounting kits(100*37*1mm)	1